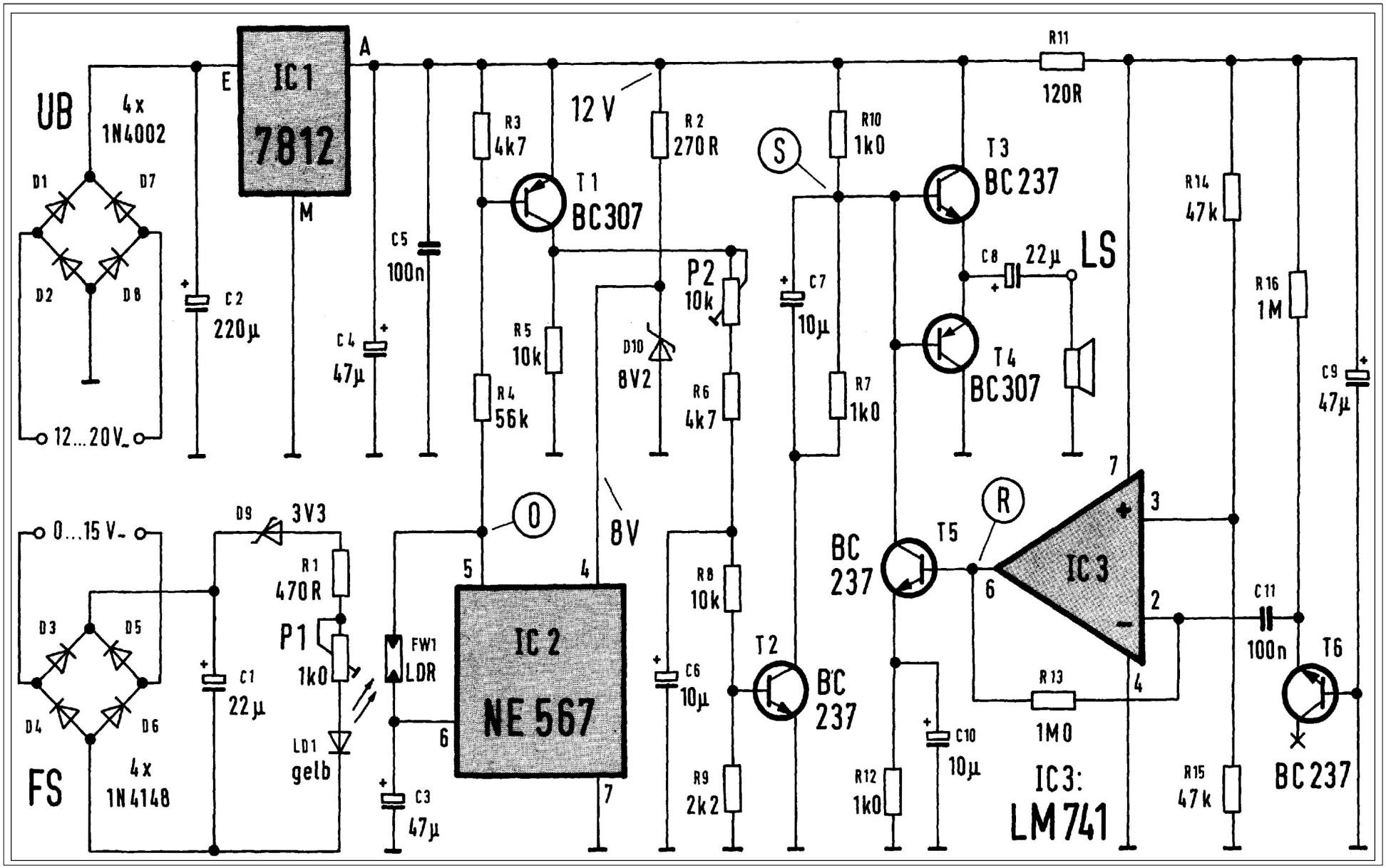

Project: Stoomlocomotief - Geluidsgenerator [Schema]
Dimensions: 160.00 x 100.00 mm

17/09/2019
17:22:26
Page 1 / 1